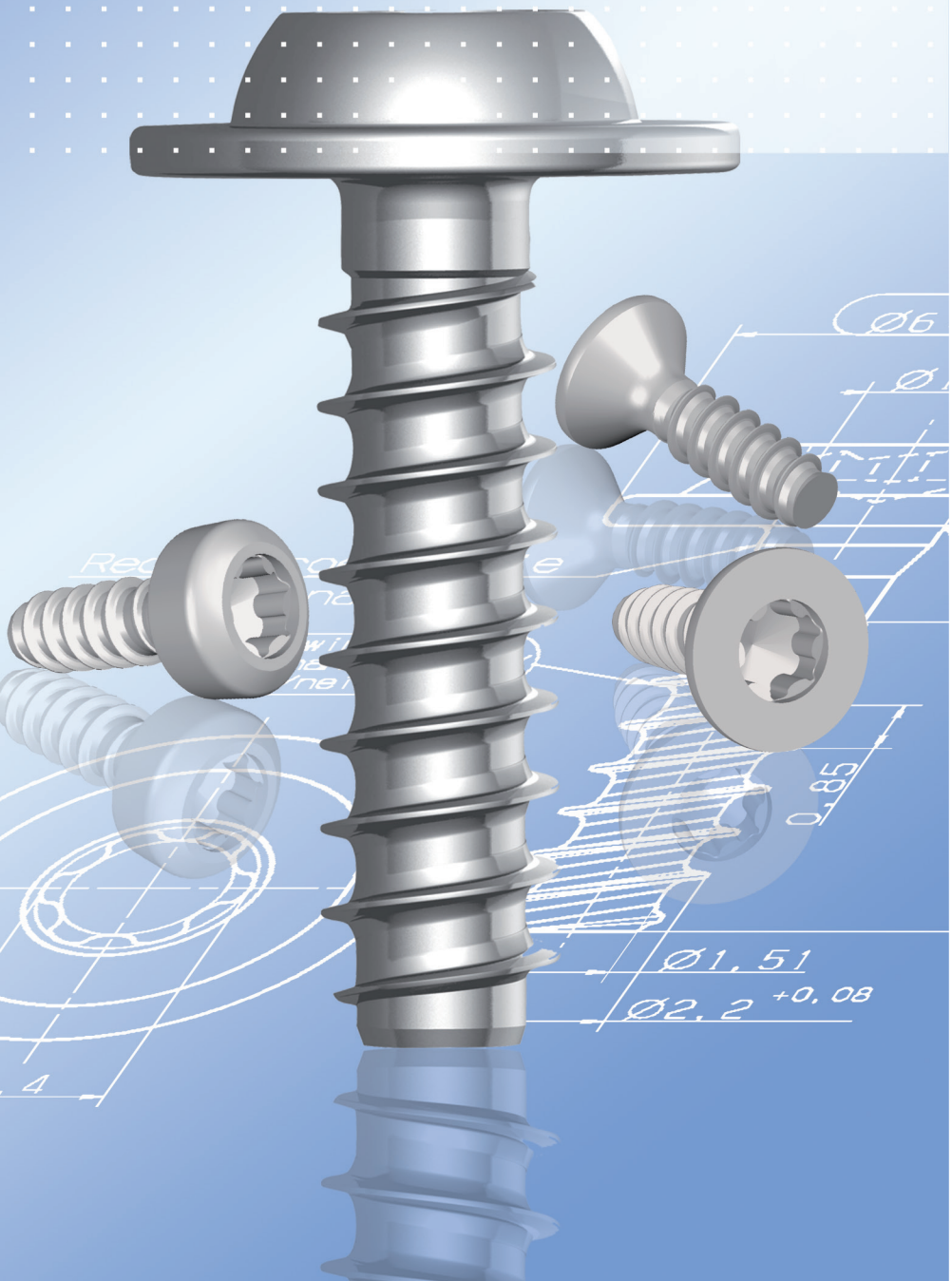

DELTA PT®

Predictable performance improvement for thermoplastics

The product

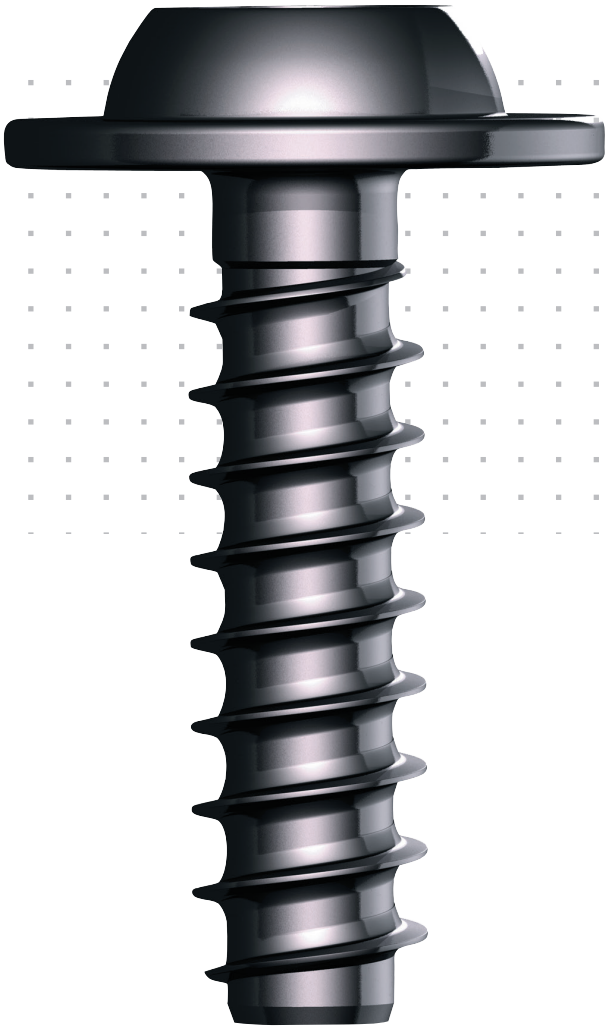

Benefits of the DELTA PT®

- Cost-effective direct fastening
- Costs saving production of the components due to simple pre-hole dimensions
- No additional safety elements necessary
- Reduced component development costs with DELTA CALC
- Recognising possible saving potentials of the screw joint
- „On site“ problem solving through specifically trained field engineers

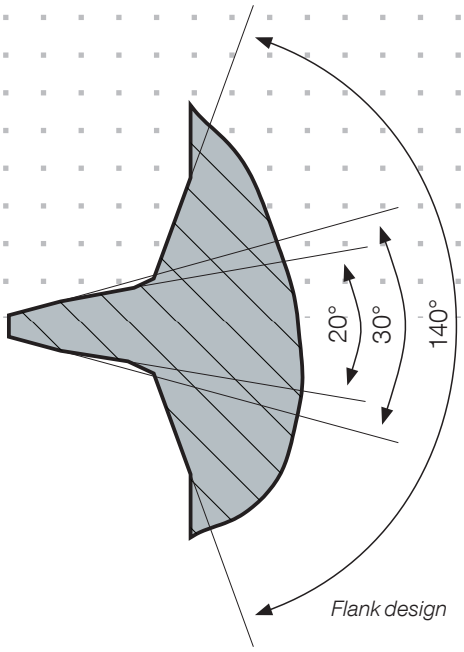

Imprint

Editor:
EJOT GmbH & Co. KG
Industrial Fasteners Division
D-57334 Bad Laasphe
Germany

Print:

New possible fields of application for high-quality plastics

Nowadays sometimes alternative materials are considered for components that used to be made of die cast light alloys. Modern technical plastics open up new possibilities because of their improved design potential or for reasons of weight reduction or recycling. Still the question of how to securely fasten these components remains unanswered or is considered very late, even though support is available during the design process already.

When machine screws are being used a variety of existing tables and formulas for joint design are known. For selftapping assembly in the high-class technical plastics, often no sufficient information is available. In most cases the parameters for assembly still have to be determined, whereas standard screws are often not qualified for assembly in plastics.

The material strength of modern technical plastics is nearly comparable to that of cast light metal. Furthermore the possible temperature range is very high so that high class plastics can be used in the automotive industry, where so far only cast light metal was suitable. This opens up new fields of application, thus the according fastening solution has to be available.

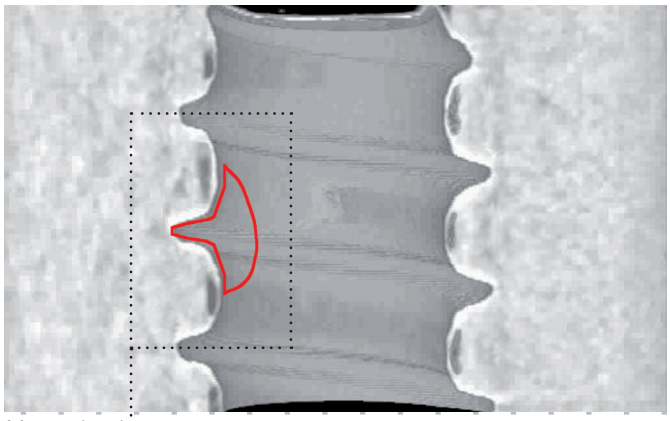

Macro detail

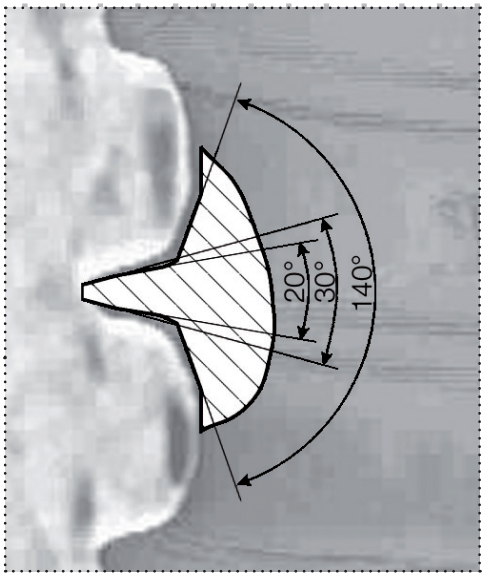

Analysis of material displacement

For the above mentioned reasons EJOT carried out fundamental tests that led to the development of the DELTA PT® screw.

The flank geometry was optimized after the consequent analysis of the material displacement during the thread grooving process. The deformation of the material takes place with minimal resistance, which guarantees damage-free flow of the material.

Minimal radial tension

The optimized thread flank angle of the DELTA PT® screw reduces the radial stress compared to common 60° flank angles of sheet metal screws.

The 20° respectively 30° angle creates only minor radial tension and therefore allows thin-wall design.
The bigger force in axial direction allows an optimum flow of the displaced material.

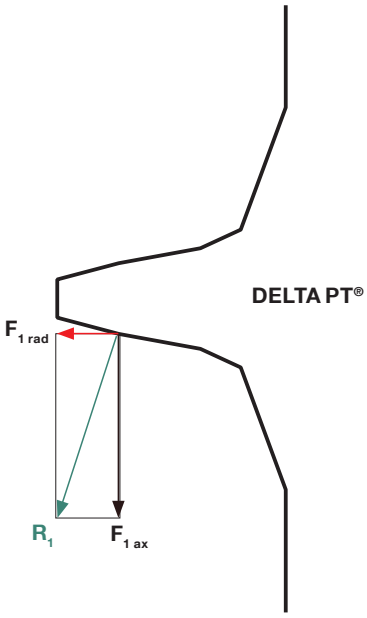

Forces at the thread flank

Predictable performance improvement

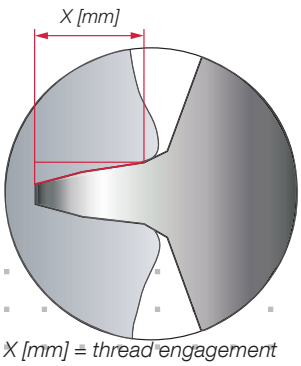

X [mm] = thread engagement

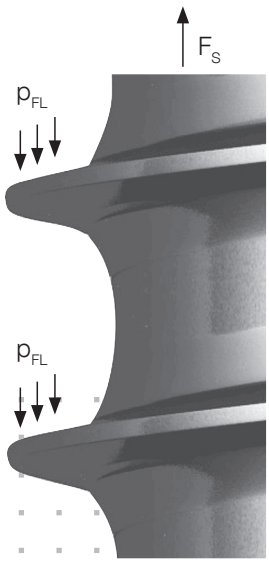

Contact pressure in the thread

High clamp loads

According to general valid construction guidelines the existing contact pressure has to be smaller than the permissible contact pressure. If the existing contact pressure is too high, it may lead to damages of thermoplastic components.

A major influence is executed by thread coverage and thus the thread pitch. The optimum helix angle of the pitch was developed by optimizing the relation between the highest possible clamp load and low contact pressure in the plastic material. Thus a higher flank coverage at equal installation depth can be achieved. This leads to the possibilty of cost reduction.

High tensile and torsion strength

The enlarged core diameter increases the tensile and torsion strength. As a result of this, even in high-filled thermoplastics higher tightening torques and better clamp loads are being achieved.

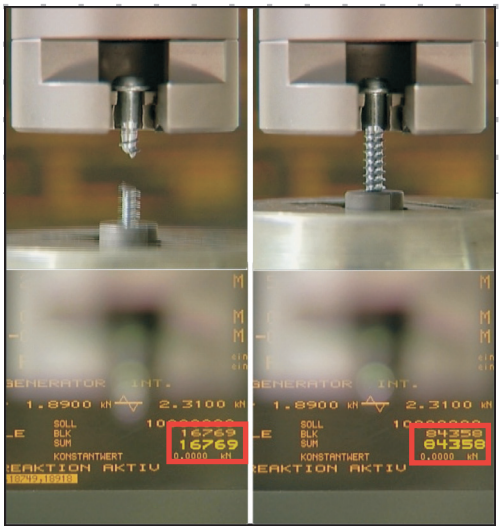

PT® *DELTA PT®*

Fatigue strength comparison;
Breakage of the thinner fastener cross section (PT®) at lower cycle rate

Increased fatigue durability

The fatigue durability is essentially improved by an extended core diameter and an optimum thread design.

The reinforced thread root improves the safety against flank breakage. The optimized pitch allows a better flank engagement and, therefore, provides better conditions against stress fracture of the thread flank.

The comparison between the „Wöhler“ graph of the PT® and the DELTA PT® screw in the dimension 50 (= 5.0 mm diameter) shows an increase of the fatigue strength by factor 1.5.

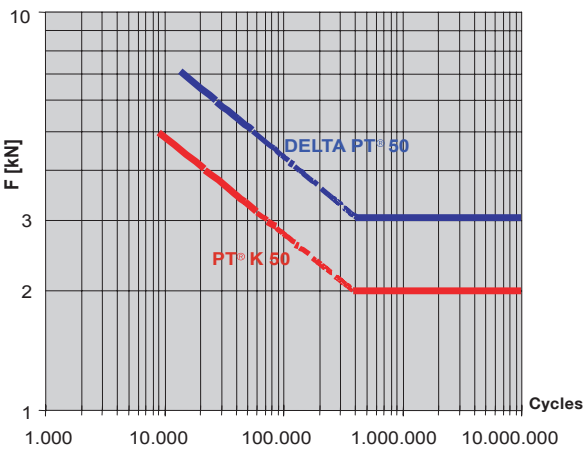

„Wöhler“ graph of PT® and DELTA PT® screw, tensile stress oscillatory;
Increased fatigue strength of DELTA PT® by 50% compared to PT®


$M_Ü$
Drehmoment
M_E
3
2
Zerstörung des Kunststoffgewindes
Aufbringen einer Vorspannkraft
Aufliegen des Schraubenkopfes
M_{Reib}
$M_E = M_{Form} + M_{Re}$
M_{Form}
1
M_E = Einschraubmoment
$M_Ü$ = Überdrehmoment

Predictable performance improvement

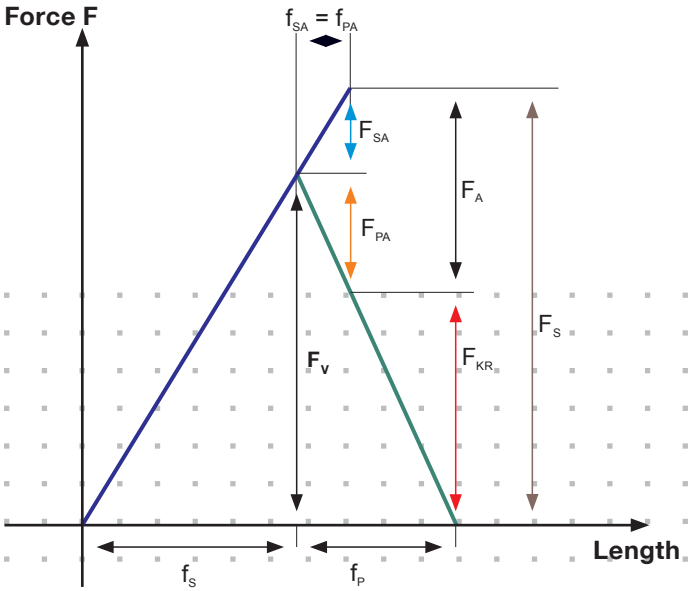

Stress diagramm

F_v clamp load
F_{SA} additional axial screw deformation force
F_{PA} force to unload component
F_A operating load
F_{KR} remaining clamp load
F_S force of the fastener
f_S elastic elongation of fastener
f_P shortening of the clamped part
f_{SA} screw elongation under dynamic pressure
f_{PA} shortening of the clamped part

Spring line screw
Spring line clamped part

Forces within a screw joint

Acting forces and deformations in the joint during operating conditions are described in the stress diagramm.

By applying an appropriate tightening torque during assembly, a relating clamp load is being created in the screw joint. Its reacting force clamps the components together.

This process creates a surface pressure, which has to be sustained by the materials involved over lifetime even under thermal stress.

The material of the mating component as well as the boss material have to resist the resulting contact pressure.

The optimized thread geometry of the DELTA PT® screw ensures adequate stress distribution within the plastic female thread. By using large head diameters, surface pressure under the head can be minimized.

Please derive more information from further literature or the EJOT Forum 6.

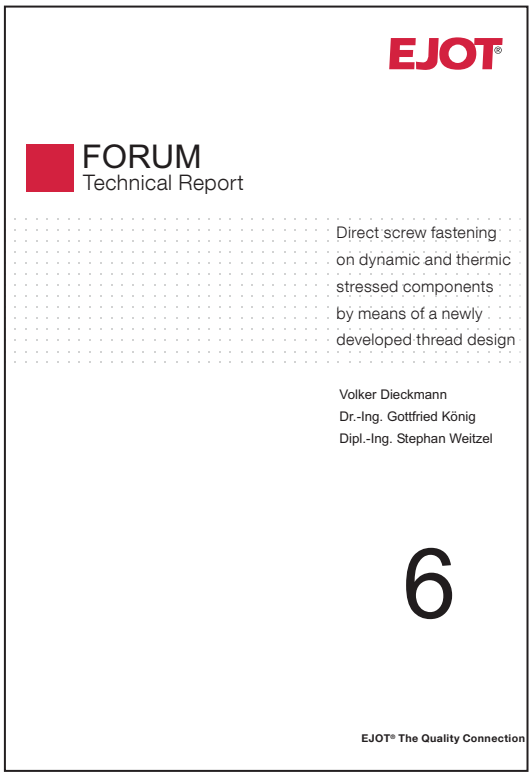
EJOT®

FORUM
Technical Report

Direct screw fastening on dynamic and thermic stressed components by means of a newly developed thread design

Volker Dieckmann
Dr.-Ing. Gottfried König
Dipl.-Ing. Stephan Weitzel

6

EJOT® The Quality Connection

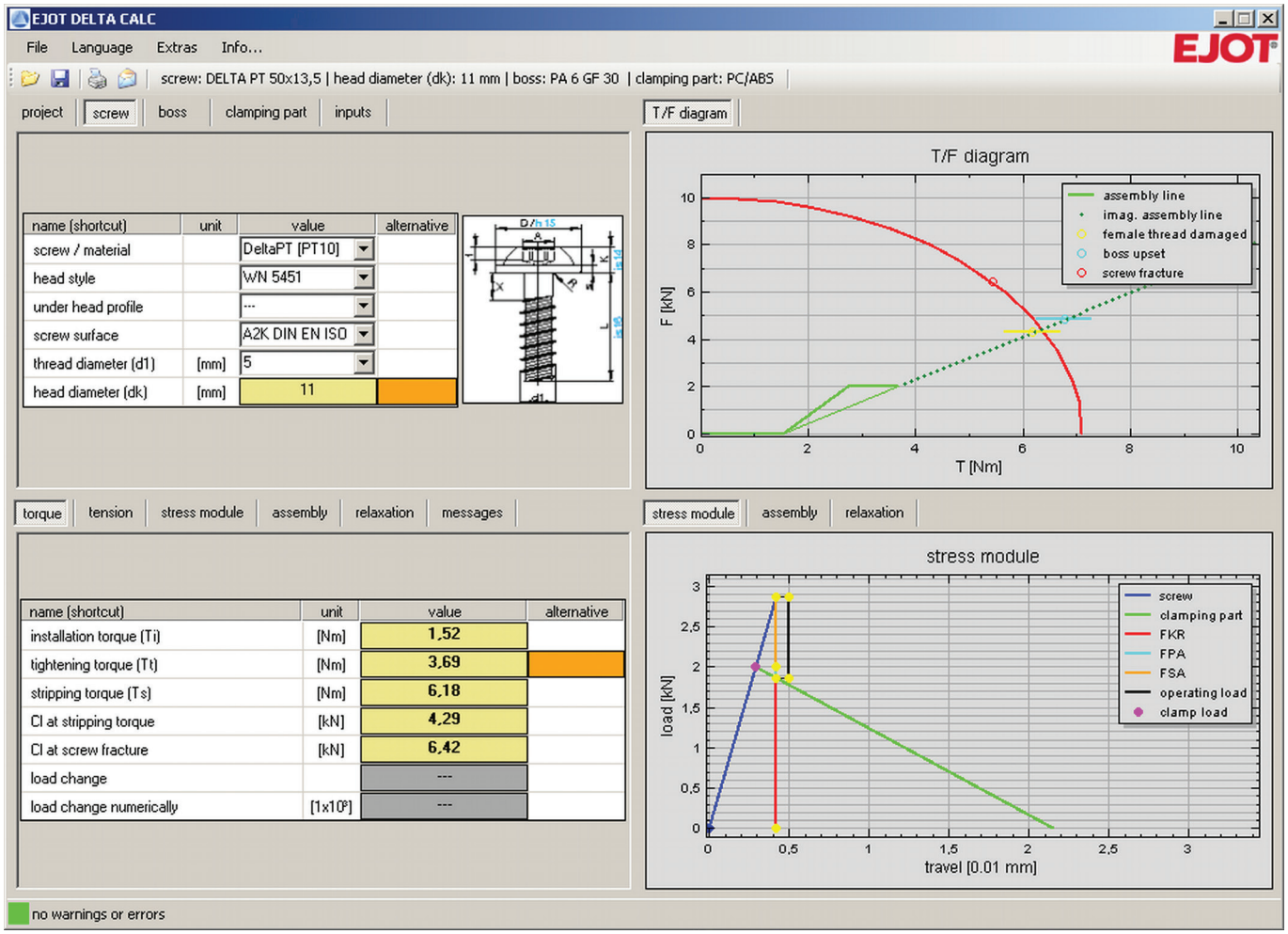

Clamp load oriented design
In addition to the improved engineering features of the screw, the prognosis program DELTA CALC was developed for DELTA PT®. The prognosis program supports the dimensioning of the fastener and also assists in determining the load carrying ability.

In accordance with VDI 2230, a clamp load oriented design is possible, whereas lifetime and durability of the screw joint under temperature stress can now be forecasted.

This allows qualitative allegations about the function of the screw joint under static stress.

For further information about the EJOT prognosis program, please contact Zack Lanman.

Phone: 312-206-9031
E-Mail: zlanman@atf-inc.com

The DELTA CALC **prognosis program enables dimensioning of screw joints for the future. That adds safety during the design stage.**
A practical test with off-tool components can be done in the ATF Applications Lab.

Calculated for improved performance

High strength under vibration

The special combination of thread pitch and flank geometry of the DELTA PT® allows high vibration safety. This safety results from the retarding effort between plastic and thread flank on the one hand and the thread pitch which is smaller than the friction angle on the other hand.

Thus better conditions against self loosening of the fastener are being achieved.

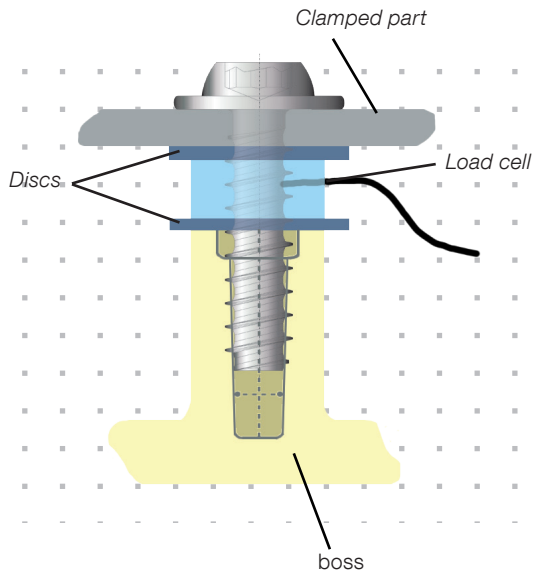

Test setup for detection of clamp force F_{Cl}

Long lifetime

If a force is applied to polymer materials, a reduction of tension by creeping and relaxation can be observed over a certain period of time. With the development of the DELTA PT® screw a lot of attention was given to this phenomenon. Due to the optimized thread geometry and high thread flank engagement a low surface pressure and thus a maximized clamp load over life time can be observed.

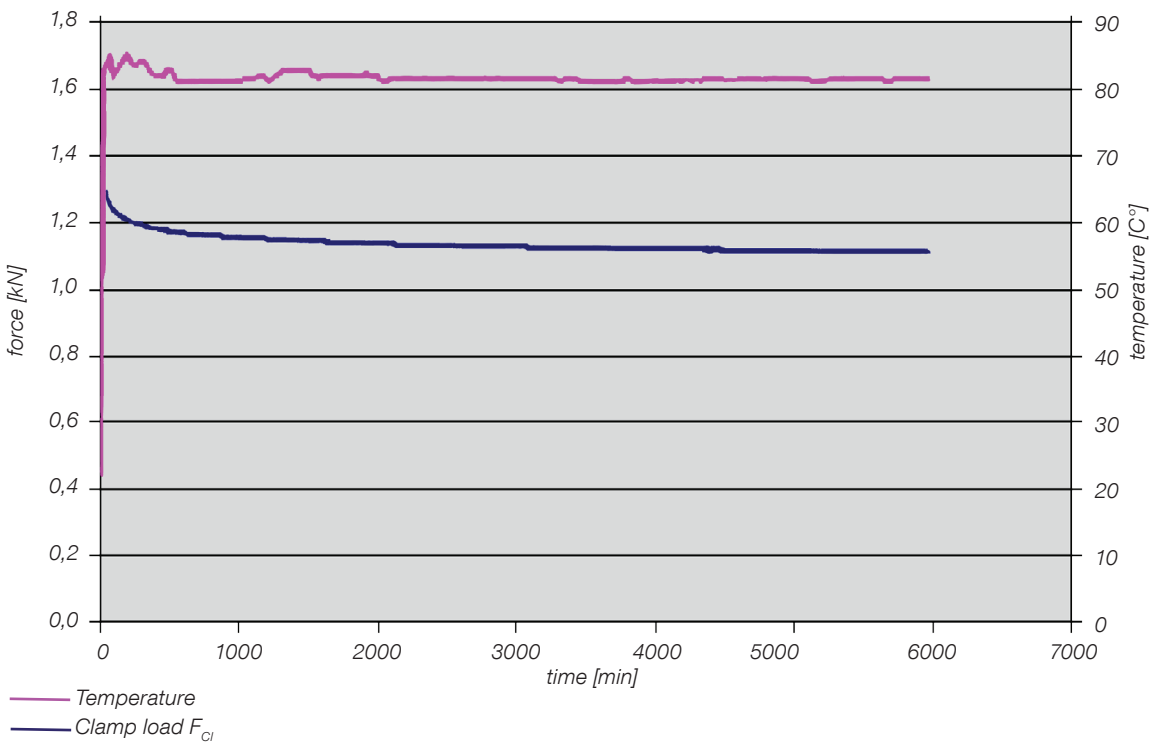

Example diagram: course of clamp load over time


DELTA CALC
customer
name
address
Tel.
Fax:
DELTA PT 60 x
EJOT
Vers.:161 bit
blind hole
MIF -Diagramm Delta-PT
F [kN]
screw
screw type
DELTA PT
thread diameter
d_1 [mm]
head diameter
Dk [mm]
head style
inputs
load carrying ability
boss load
fastening
penetration depth
clamp load
operating load (axial)
clamp force
3,50
torque
tight. torque
inst. torque Ti
strip. torque Ts
failure
failure at:
F_V [kN]:
load change [1x10^6]
tension
no operating load
tension thread
[N/mm²]
87
tension head
[N/mm²]
43
tension counter-bore
[N/mm²]
assembly
driver tool tol. [%]
[%]
5,0%
max tightening torque
Tt max [Nm]
9,53
average tightening torque
Tt average [Nm]
9,07
min tightening torque
Tt min [Nm]
8,62
clamp load
F_V_mont. max [kN]
3,81
F_V_mont. mit [kN]
3,50
F_V_mont. min [kN]
3,19
relaxation
temp. relax [°C]
time
[h] bzw [J/J]
0,0
tension thread
σ_ver [N/mm²]
remaining clamp load
[kN]
temperaturprofile
reference temp.
[°C]
time of comparison
[h]
tension thread
σ_ver [N/mm²]
remaining clamp load
[kN]
°C
time [h]
Tt_min
Tt max

Ratio potential

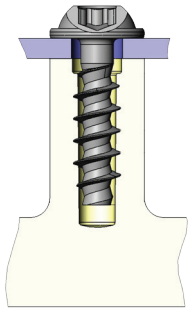

1. Initial situation
EJOT PT® K 50x16

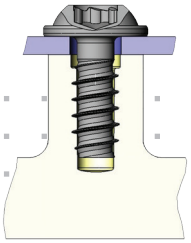

2. Alternative A
EJOT DELTA PT® 50x12

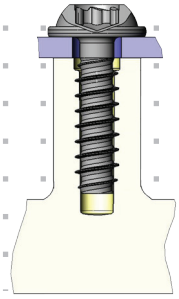

3. Alternative B
EJOT DELTA PT® 40x16

Material: PA6 GF30	A_{th} mm²	P mm	d_h mm	d_i mm	T_t Nm	F_c kN
1. PT®K 50	35	2,24	4,0	13,24	2,9	1,4
2. DELTA PT® 50	35	1,80	4,0	9,88	2,9	1,8
3. DELTA PT® 40	35	1,46	3,2	11,75	2,9	2,4

Key:

A_{th} = thread coverage
P = pitch
d_h = hole diameter
d_i = installation depth
T_t = tightening torque
F_c = clamp load

If an existing PT® screw is being replaced by a DELTA PT® screw, screw diameter and/or screw length can be reduced with a consistent thread coverage

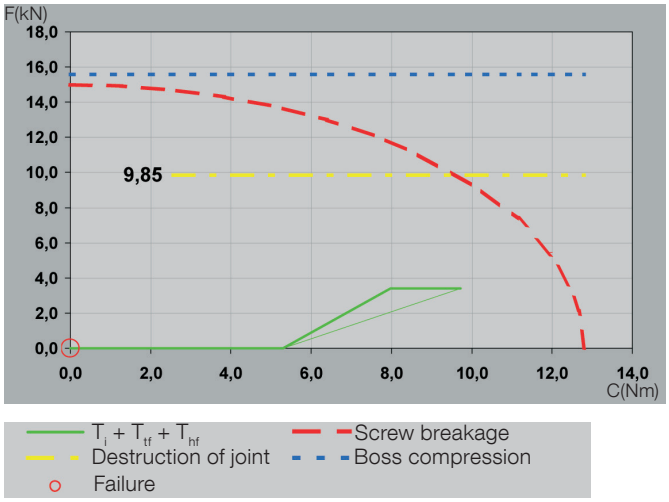

DELTA CALC® Diagram

Reduction of fastener length and/or diameter:

An example is supposed to demonstrate, how the screw length or the screw diameter can be reduced by using DELTA PT® screws. A PT® screw with a 30° profile angle and core recess is compared to a DELTA PT® screw. Assuming the same thread engagement, which depends on pitch, insertion depth and flank geometry, possibilities as shown in the chart will result. (Pictures 1., 2., 3.)
The thread enagagement resulting from conventional 30° screws can be achieved by using DELTA PT® with a lower insertion depth or a smaller nominal diameter. As an alternative, a DELTA PT® screw with the same dimensions can be used in order to reach a higher clamp load.

Application example

Using the example of a new generation of valves, the practicability of the ratio potential can be demonstrated. The previous construction solution was analyzed for savings potential. In the existing solution so far a 6 mm screw had been used. The joint was recalculated with the DELTA CALC prognosis programme (see also p. 7) and the results indicated an over-dimensioned thread diameter.

Thus for the first prototypes the new design of the valves was then dimensioned for a 5 mm DELTA PT® screw. The tests produced the following results:

T_i: 2,45 Nm
T_s: 8,44 Nm
T_t: 4,5 Nm

The valves were then put into the life cycle test with these assembly parameters. Here, no leak problems emerged. The assembly with the new construction design is running since quite some time without any failures now.

For the valve producer the reduction of the screw diameter due to the use of the DELTA PT® screw resulted in the minmization of the component's wall thicknesses. The component could thus be produced with less material employment, which also led to reduced cycle times in production. The smaller thread diameter led to considerable cost savings and a general weight reduction of the component.

The precondition for a safe screw joint is the functional design of the components.
In principle, the boss design should correspond to the illustrated design recommendation.

The counterbore is of special importance, as it ensures a favourable edge stress reduction, thus preventing boss cracking. In addition, the counterbore acts as a lead-in and guidance during initial thread forming.

Boss design
The most favourable hole diameter has in most cases proven to be:

d_b = 0,8 x d_1 ± tolerance of screwdiameter
(see tolerance page 16)

For higher filled materials or materials with a bigger strength the hole diameter can be increased up to d_b = 0,88 x d_1. The draft angle in the core hole should be kept as small as possible. max 0.5° per side.

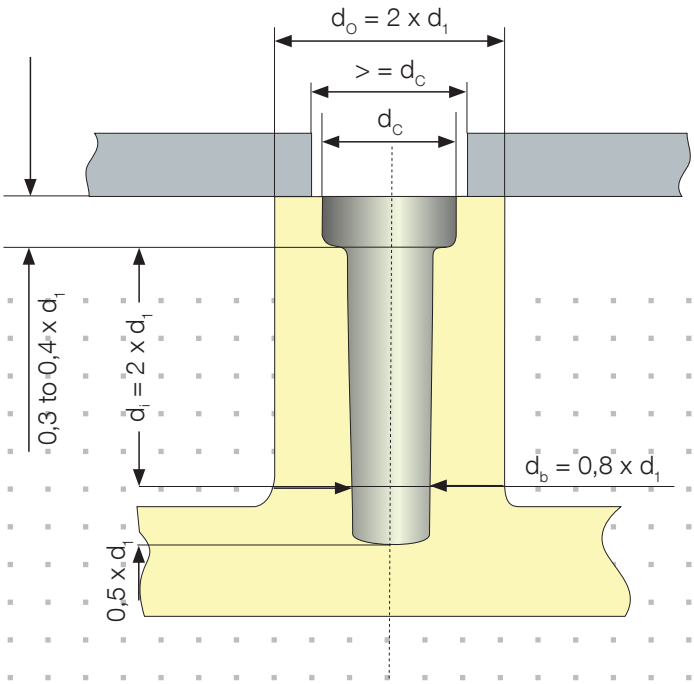

d_1 = Nominal-Ø of the screw
d_C = d_1 x 1,05

Revolution speed
With the use of a DELTA PT® screw the default recommendation of 500 r/min can easily be increased to 1000 r/min in many plastics - without significant slumps in achievable clamp load or stripping torque.

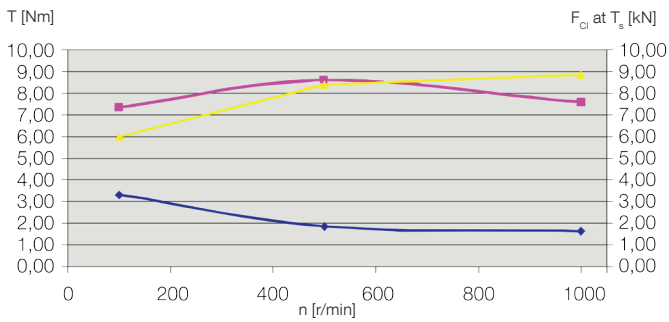

Mean T_i
Mean T_s
Mean F_{Cl}
Material: fibre-glass-reinforced polyamide

The graph shows that an increased revolution speed is possible with constant F_{Cl} and T_s when a DELTA PT® screw is used

Design recommendations have been worked out on the basis of extensive laboratory tests. In practical operations, deviations of these recommendations may occur due to:

- processing conditions of the material
- design of the injection tool
- distance from the injection point
- the formation of welding lines
- local textures caused by additives and fillings
- materials often variate in the percentage of the composition

Thus, fastening tests should be carried out with initial samples. For this purpose, ATF operates its own application laboratory.

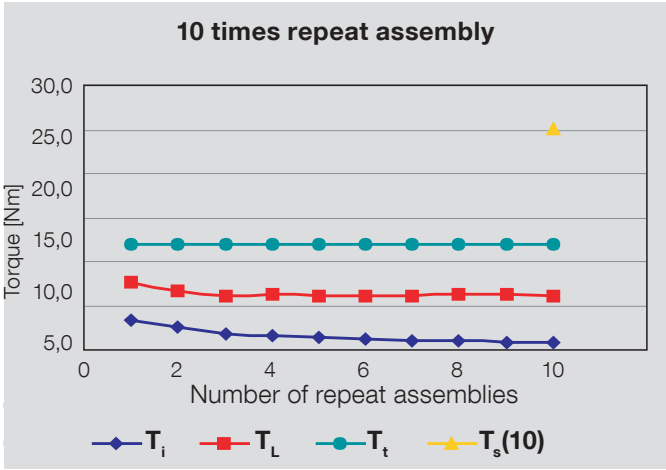

Material: ABS
Screw: DELTA PT® 80
Hole-Ø: 5,80 – 6,30 mm, conical
Penetration depth: 17 mm

T_i: Installation Torque
T_t: Tightening Torque
T_s: Stripping Torque
T_l: Loosening Torque

Tigthening torques and repeat accuracy

In order to ensure safe screw joints and smooth assemblies, many influencing factors have to be considered. A sufficiently high distance between installation and stripping torque is as important as the use of an appropriate drive tool featuring torque and/or torque angle shut off.

The tightening torque is calculated as a function of the required clamp force. The driver tool is to be adjusted accordingly. Component tests should be carried out to establish the repeat accuracy as well as the real clamp load in order to consider all influences which have not yet been determined.

Under common design circumstances a several time repeat assembly is possible. In accordance with VDE 0700 the general requirements can be achieved.

Torque test

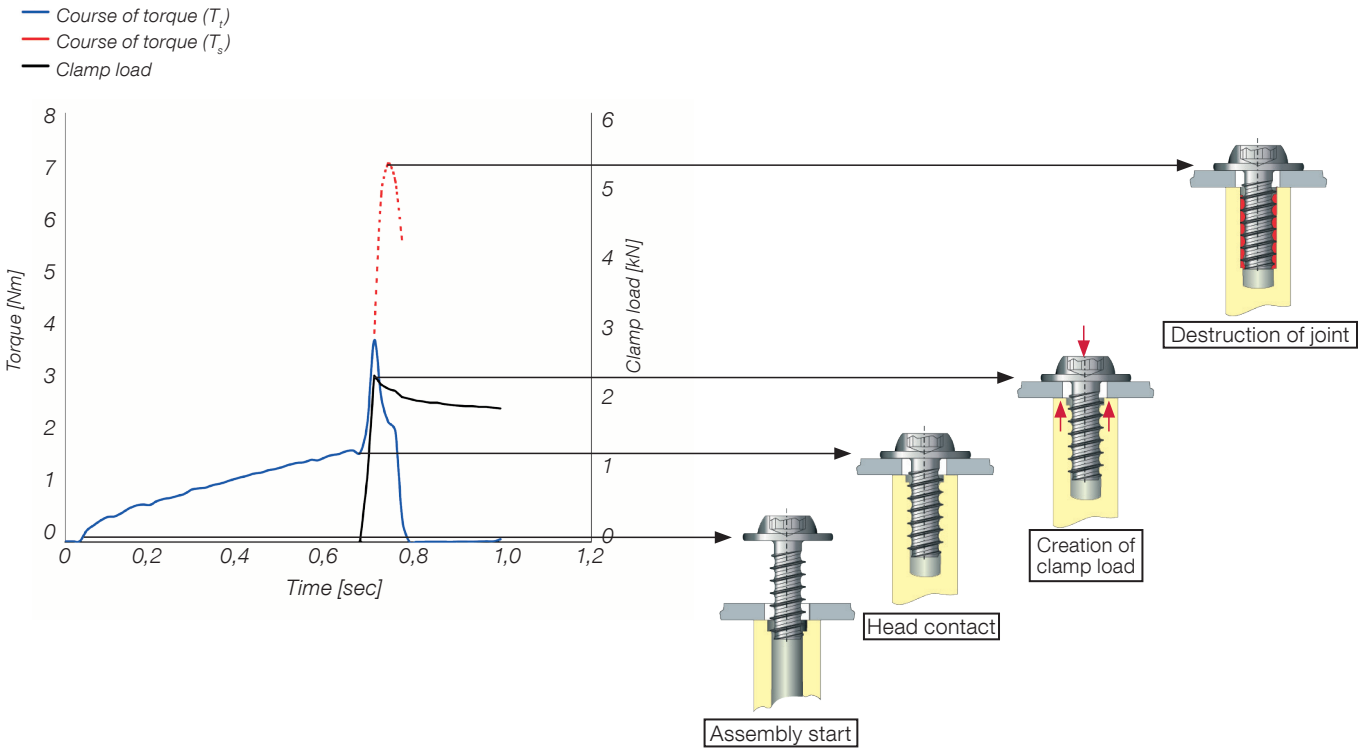

Example graph: Installation of DELTA PT®


Reduziergeometrie
optional
Gewinde
vorhanden
ja/nein
100%
Ø6 -0,5
100%
Ø1,7 +0,3
R0,15
0,6 ±0,1
max. 2,5
8 ±0,45
0,85
Ø1,51
Ø2,2 +0,08
2,4
HH PK 156

Design

DELTA PT®	Dimensions		10	12	14	16	18	20	22	25
	External thread-Ø	d_1	1,00	1,20	1,40	1,60	1,80	2,00	2,20	2,50
	Core-Ø	d_2	0,64	0,78	0,93	1,07	1,22	1,36	1,51	1,72
	Thread pitch	P	0,44	0,51	0,57	0,64	0,71	0,78	0,85	0,95
	Thread run-out	$X_{max.}$	0,50	0,60	0,70	0,80	0,90	1,00	1,10	1,30

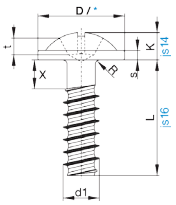

WN 5411	Dimensions			10	12	14	16	18	20	22	25
	Head-Ø		D			3,20	3,60	4,00	4,50	5,00	5,50
	Head height		K			1,15	1,20	1,35	1,40	1,60	1,80
	Washer thickness		s			0,50	0,60	0,60	0,60	0,60	0,70
	Radius		R_{max}						0,35	0,35	0,40
	H-cross-recess	Penetration depth	t min.						0,51	0,68	0,82
			t max.						0,97	1,14	1,28
	Z-cross-recess	Penetration depth	t min.						0,73	0,86	1,01
			t max.						0,98	1,11	1,26
	C-cross-recess	Penetration depth	t min.			0,56	0,81	1,01			
			t max.			0,84	1,10	1,31			
	Cross size H/Z/C					0	0	0	1	1	1

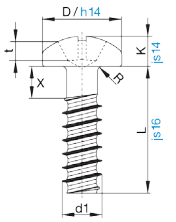

WN 5412	Dimensions			10	12	14	16	18	20	22	25
	Head-Ø		D						3,50	3,90	4,40
	Head height		K						1,60	1,60	1,90
	Radius		R_{max}						0,35	0,35	0,40
	H-cross-recess	Penetration depth	t min.						0,64	0,74	0,92
			t max.						1,10	1,20	1,38
	Z-cross-recess	Penetration depth	t min.						0,82	0,92	1,08
			t max.						1,07	1,17	1,33
	C-cross-recess	Penetration depth	t min.								
			t max.								
	Cross size H/Z/C								1	1	1

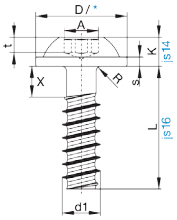

WN 5451	Dimensions			10	12	14	16	18	20	22	25
	Head-Ø		D			3,20	3,60	4,00	4,50	5,00	5,50
	Head height		K			1,15	1,20	1,35	1,60	1,60	1,90
	Washer thickness		s			0,50	0,60	0,60	0,60	0,60	0,70
	Radius		R_{max}			0,20	0,25	0,25	0,35	0,35	0,40
	TORXplus® / AUTOSERT®					3IP	5IP	6IP	6IP	6IP	8IP
			$A_{Ref.}$			1,20	1,45	1,75	1,75	1,75	2,40
	Penetration depth		t min.			0,40	0,50	0,50	0,65	0,65	0,80
			t max.			0,55	0,65	0,65	0,85	0,85	1,00

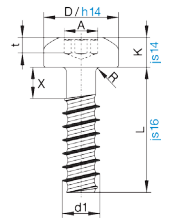

WN 5452	Dimensions			10	12	14	16	18	20	22	25
	Head-Ø		D	2,00	2,30	2,60	3,00	3,30	3,50	3,90	4,40
	Head height		K	0,80	0,95	1,05	1,20	1,30	1,60	1,60	1,90
	Radius		R_{max}	0,20	0,20	0,20	0,25	0,25	0,35	0,35	0,40
	TORXplus® / AUTOSERT®			2IP	3IP	3IP	5IP	6IP	6IP	6IP	8IP
			$A_{Ref.}$	1,00	1,20	1,20	1,45	1,75	1,75	1,75	2,40
	Penetration depth		t min.	0,30	0,35	0,35	0,50	0,50	0,65	0,65	0,80
			t max.	0,45	0,50	0,50	0,65	0,65	0,85	0,85	1,00

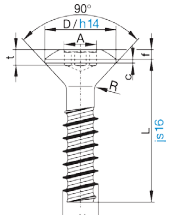

WN 5453	Dimensions			10	12	14	16	18	20	22	25
	Head-Ø		D						4,00	4,40	5,00
	Cyl. head height		c_{max}						0,35	0,35	0,55
	Calotte height		≈ f						0,40	0,40	0,50
	Radius		R_{max}						0,80	0,80	1,00
	TORXplus® / AUTOSERT®								6IP	6IP	8IP
			$A_{Ref.}$						1,75	1,75	2,40
	Penetration depth		t min.						0,65	0,65	0,80
			t max.						0,85	0,85	1,00

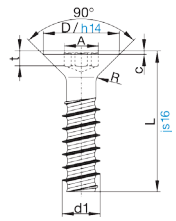

WN 5454	Dimensions			10	12	14	16	18	20	22	25
	Head-Ø		D	2,35	2,65	2,80	3,35	3,65	4,00	4,40	5,00
	Cyl. head height		c_{max}	0,20	0,25	0,30	0,35	0,35	0,35	0,35	0,55
	Radius		R_{max}	0,40	0,40	0,50	0,60	0,60	0,80	0,80	1,00
	TORXplus® / AUTOSERT®			2IP	3IP	3IP	5IP	6IP	6IP	6IP	8IP
			$A_{Ref.}$	1,00	1,20	1,20	1,45	1,75	1,75	1,75	2,40
	Penetration depth		t min.	0,30	0,35	0,35	0,50	0,50	0,50	0,50	0,70
			t max.	0,45	0,50	0,50	0,65	0,65	0,65	0,65	0,90

** DELTA PT® 14-18: h14*
from DELTA PT® 20: h15

DELTA PT®	Dimensions			30	35	40	45	50	60	70	80	100
	External thread-Ø		d_1	3,00	3,50	4,00	4,50	5,00	6,00	7,00	8,00	10,00
	Core-Ø		d_2	2,09	2,45	2,81	3,17	3,53	4,26	4,98	5,70	7,15
	Thread pitch		P	1,12	1,29	1,46	1,63	1,80	2,14	2,48	2,82	3,50
	Thread run-out		$X_{max.}$	1,50	1,80	2,00	2,30	2,50	3,00	3,50	4,00	5,00

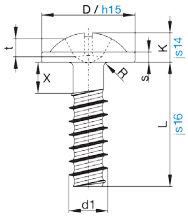

WN 5411	Dimensions			30	35	40	45	50	60	70	80	100
	Head-Ø		D	6,50	7,50	9,00	10,00	11,00	13,50	15,50		
	Head height		K	2,10	2,40	2,50	2,50	3,20	4,00	4,60		
	Washer thickness		s	0,80	0,90	1,00	1,00	1,20	1,40	1,60		
	Radius		R_{max}	0,50	0,50	0,60	0,60	0,70	0,80	0,90		
	H-cross-recess	Penetration depth t	min.	1,15	1,07	1,33	1,33	1,98	2,24	2,84		
			max.	1,61	1,70	1,96	1,96	2,61	2,90	3,50		
	Z-cross-recess	Penetration depth t	min.	1,26	1,08	1,40	1,40	2,01	2,27	2,91		
			max.	1,51	1,54	1,86	1,86	2,47	2,73	3,37		
	C-cross-recess	Penetration depth t	min.									
			max.									
	Cross size H/Z/C			1	2	2	2	2	3	3		

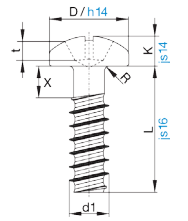

WN 5412	Dimensions			30	35	40	45	50	60	70	80	100
	Head-Ø		D	5,30	6,10	7,00	7,50	8,80	10,50	12,30		
	Head height		K	2,30	2,70	3,10	3,20	3,50	4,20	5,10		
	Radius		R_{max}	0,50	0,50	0,60	0,60	0,70	0,80	0,90		
	H-cross-recess	Penetration depth t	min.	1,19	1,23	1,51	1,51	2,12	2,44	3,00		
			max.	1,65	1,86	2,14	2,14	2,75	3,10	3,66		
	Z-cross-recess	Penetration depth t	min.	1,36	1,26	1,62	1,62	2,23	2,57	3,14		
			max.	1,61	1,72	2,08	2,08	2,67	3,03	3,61		
	C-Kreuz-schlitz	Penetration depth t	min.									
			max.									
	Cross size H/Z/C			1	2	2	2	2	3	3		

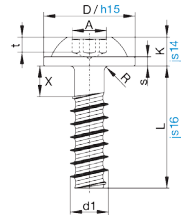

WN 5451	Dimensions			30	35	40	45	50	60	70	80	100
	Head-Ø		D	6,50	7,50	9,00	10,00	11,00	13,50	15,50	18,00	
	Head-height		K	2,30	2,70	3,10	3,20	3,50	4,20	4,90	5,60	
	Washer thickness		s	0,80	0,90	1,00	1,10	1,20	1,40	1,60	1,80	
	Radius		R_{max}	0,50	0,50	0,60	0,60	0,70	0,80	0,90	1,00	
	TORXplus® / AUTOSERT®			10IP	15IP	20IP	20IP	25IP	30IP	30IP	40IP	
			$A_{Ref.}$	2,80	3,35	3,95	3,95	4,50	5,60	5,60	6,75	
	Penetration depth	t	min.	1,00	1,10	1,40	1,40	1,50	1,90	2,30	2,60	
			max.	1,30	1,50	1,80	1,80	1,90	2,40	2,90	3,20	

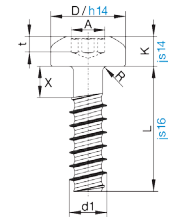

WN 5452	Dimensions			30	35	40	45	50	60	70	80	100
	Head-Ø		D	5,30	6,10	7,00	7,50	8,80	10,50	12,30	14,10	17,00
	Head height		K	2,30	2,70	3,10	3,20	3,50	4,20	4,90	5,60	6,60
	Radius		R_{max}	0,50	0,50	0,60	0,60	0,70	0,80	0,90	1,00	1,10
	TORXplus® / AUTOSERT®			10IP	15IP	20IP	20IP	25IP	30IP	30IP	40IP	50IP
			$A_{Ref.}$	2,80	3,35	3,95	3,95	4,50	5,60	5,60	6,75	8,95
	Penetration depth	t	min.	1,00	1,10	1,40	1,40	1,50	1,90	2,30	2,60	3,00
			max.	1,30	1,50	1,80	1,80	1,90	2,40	2,90	3,20	3,70

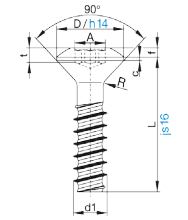

WN 5453	Dimensions			30	35	40	45	50	60	70	80	100
	Head-Ø		D	6,00	7,00	8,00	9,00	10,00	12,00	14,00	16,00	20,00
	Cyl. head height		c_{max}	0,55	0,65	0,70	0,70	0,75	0,85	0,90	0,95	1,10
	Calotte height		≈ f	0,70	0,80	1,00	1,00	1,20	1,20	1,30	1,40	1,60
	Radius		R_{max}	1,20	1,40	1,60	1,80	2,00	2,40	2,60	3,20	4,50
	TORXplus® / AUTOSERT®			10IP	15IP	20IP	20IP	25IP	30IP	30IP	40IP	50IP
			$A_{Ref.}$	2,80	3,35	3,95	3,95	4,50	5,60	5,60	6,75	8,95
	Penetration depth	t	min.	1,00	1,10	1,40	1,40	1,50	1,90	2,30	2,60	3,00
			max.	1,30	1,50	1,80	1,80	1,90	2,40	2,90	3,20	3,70

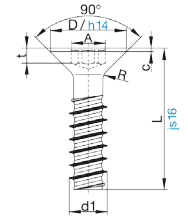

WN 5454	Dimensions			30	35	40	45	50	60	70	80	100
	Head-Ø		D	6,00	7,00	8,00	9,00	10,00	12,00	14,00	16,00	20,00
	Cyl. head height		c_{max}	0,55	0,65	0,70	0,70	0,75	0,85	0,90	0,95	1,10
	Radius		R_{max}	1,20	1,40	1,60	1,80	2,00	2,40	2,60	3,20	4,50
	TORXplus® / AUTOSERT®			10IP	15IP	20IP	20IP	25IP	30IP	30IP	40IP	50IP
			$A_{Ref.}$	2,80	3,35	3,95	3,95	4,50	5,60	5,60	6,75	8,95
	Penetration depth	t	min.	0,75	0,95	1,10	1,25	1,25	1,50	2,30	2,40	3,00
			max.	1,00	1,30	1,45	1,70	1,65	2,00	2,90	2,90	3,70

Tolerances

Tolerance	Nominal value [mm]							
		over 3	over 6	over 10	over 18	over 30	over 50	over 80
	to 3	to 6	to 10	to 18	to 30	to 50	to 80	to 120
h 14	0 -0,25	0 -0,30	0 -0,36	0 -0,43	0 -0,52			
h 15	0 -0,40	0 -0,48	0 -0,58	0 -0,70	0 -0,84			
js 14	± 0,12	± 0,15	± 0,18					
js 16	± 0,30	± 0,375	± 0,45	± 0,55	± 0,65	± 0,80	± 0,95	± 1,10
js 17			± 0,75	± 0,90	± 1,05	± 1,25	± 1,50	

screw	10	12	14	16	18	20	22	25
External-Ø d_1	1,0	1,2	1,4	1,6	1,8	2,0	2,2	2,5
Tolerance	+0,08	+0,08	+0,08	+0,08	+0,08	+0,08	+0,08	+0,10

screw	30	35	40	45	50	60	70	80	100
External-Ø d_1	3,0	3,5	4,0	4,5	5,0	6,0	7,0	8,0	10,0
Tolerance	+0,10	+0,10	+0,10	+0,10	+0,15	+0,15	+0,18	+0,18	+0,25

Special variations / Examples

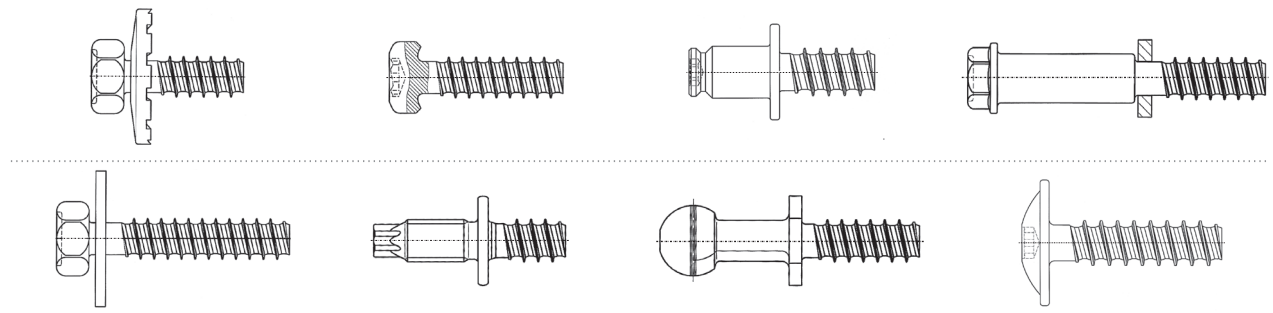

Special variations are available.
Please contact the EJOT application engineers to realize your multifunctional designs.

Example of ordering

Head style	Labelling	Drive	Dia-meter	Labelling		Length	Thread-end	Labelling	Surface
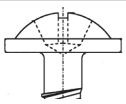	→ 11	Z H C	1,00 1,20	→ 10 → 12		min. 2xd	Standard	--	Zn-blue
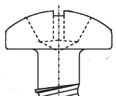	→ 12	Z H C					Short dog point 	Z	DeltaTone
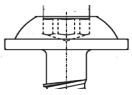	→ 51	--	4,00	→ 40		14	Pilot point 	R	Zn-Ni
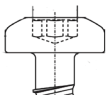	→ 52	--					formed grooves 	DS	DeltaProtekt
			8,00 10,00	→ 80 → 100		max. 10xd			
DELTA PT WN 54	11	H		40	x	14		R	Zn-blue

Chrom VI free surfaces:

- zinc clear / blue passivated
- zinc clear / blue passivated with EJOSEAL (240h resistance to Zn-corrosion)
- zinc clear / thick film passivation
- ZnFe or ZnNi / transparent passivated (with or without black top coats)
- ZnNi, black passivated
- zinc flake coatings (depending on Ø) (e.g. Delta Protekt)

Fastener materials:

- Through hardened steel according to DIN EN 10263-4 with material property [PT 10] (WN 5461, part 2)
- Stainless steel [A2], [A4]
- Aluminium [Alu]
- Plastics

More information under:
EJOT Hotline
Phone +49 2751 529-123
Fax +49 2751 529-98 123
e-mail: hotline@ejot.de

Possible manufacturing range of DELTA PT® screws

	10	12	14	16	18	20	22	25	30	35	40	45	50	60	70	80	100
Ø d_1 [mm]	1,0	1,2	1,4	1,6	1,8	2,0	2,2	2,5	3,0	3,5	4,0	4,5	5,0	6,0	7,0	8,0	10,0
Length [mm]																	
3,0																	
3,5																	
4,0																	
4,5																	
5,0																	
6,0							X										
7,0					R		X	X									
8,0					R	R	R, X	X	X								
9,0					R	R	R, X	R, X	X	X							
10,0					R	R	R, X	R, X	X	X	X						
12,0					R	R	R, X	R, X	R, X	X	X	X	X				
14,0					R	R	R, X	R, X	R, X	R, X	R, X	X	X				
15,0					R	R	R, X	R, X	R, X	R, X	R, X	X	X	X			
16,0					R	R	R, X	R, X	R, X	R, X	R, X	R, X	X	X			
18,0					R	R	R, X	R, X	R, X	R, X	R, X	R, X	R, X	X	X		
20,0						R	R, X	R, X	R, X	R, X	R, X	R, X	R, X	X	X	X	
21,0							R, X	R, X	R, X	R, X	R, X	R, X	R, X	R, X	X	X	
22,0							R, X	R, X	R, X	R, X	R, X	R, X	R, X	R, X	X	X	
24,0								R, X	R, X	R, X	R, X	R, X	R, X	R, X	X	X	
25,0								R, X	R, X	R, X	R, X	R, X	R, X	R, X	X	X	X
27,0									R, X	R, X	R, X	R, X	R, X	R, X	X	X	X
30,0									R, X	R, X	R, X	R, X	R, X	R, X	X	X	X
35,0										R, X	R, X	R, X	R, X	R, X	X	X	X
36,0											R, X	R, X	R, X	R, X	X	X	X
40,0											R, X	R, X	R, X	R, X	X	X	X
42,0												R, X	R, X	R, X	X	X	X
45,0												R, X	R, X	R, X	X	X	X
48,0													R, X	R, X	X	X	X
50,0													R, X	R, X	X	X	X
60,0														R, X	X	X	X
70,0															X	X	X
80,0																X	X
100,0																	X

Upper line ≙ minimal length (countersunk head length L_{min} = L + 2 mm)

Lower line ≙ maximal length

Length > 60 mm with partial thread only (partial thread length 4 x d_1)

Special geometries upon request!

R Manufacturing with pilot point possible (length tolerance acc. js 17)
X DELTA PT® DS version for thermoset joints possible

ATF, Inc.
3550 West Pratt Avenue
Lincolnwood, IL 60712
phone 847-677-1300
fax 847-677-9335
e-mail: quoting@atf-inc.com
internet: www.atf-inc.com

For addtional information please contact:
Zack Lanman - Product Specialist / Threadforming
312-206-9031
zlanman@atf-inc.com

312-E/1,2/07.14